केन्द्रीय विद्युत अनुसंधान संस्थान

(भारत सरकार की सोसाइटी, विद्युत मंत्रालय)
क्षेत्रीय परीक्षण प्रयोगशाला
3-ए, इंस्टीटयुशनल एरिया, सैक्टर-62, नोएडा-201309 (उ0प्र0)

CENTRAL POWER RESEARCH INSTITUTE

(A Government of India Society, Ministry of Power)
REGIONAL TESTING LABORATORY
3-A, Institutional Area, Sector - 62, Noida - 201309 (U.P.)
वेबसाईट / Website : http://cpri.res.in

संदर्भ क्रमांक : सीपीआरआई/आरटीएल/एचवी/2024-25/ 3710 दिनाँक (Date) : 23.08.2024

सेवा में/To,

M/s. SK Engineers India Private Limited
Plot No-C21 And 71/2, IID Centre
Industrial Estate, Khordha, Odisha-752057

विषय (Sub): परीक्षण प्रमाणपत्र (Test Report): CPRINOAHV24T0486 Dt.: 22.08.2024

महोदय / Dear sir,

हमारी प्रयोगशाला में आपके सैंपल पर दिनाँक 14.08.2024 और 16.08.2024 तक संचालित परीक्षण के संबंध में निम्नलिखित दस्तावेज संलग्न है।

Please find attached the following documents in respect of the test(s) conducted on your sample on 14.08.2024 & 16.08.2024 at our laboratory.

रिपोर्ट में यदि असंगतियां हो तो इस रिपोर्ट के जारी होने की तारीख से ४५ दिन के अंदर लिखित रूप में हमारे ध्यान में लाई जाय ताकि आवश्यक संसोधन किया जा सके और इसके लिए रिपोर्ट की सभी मूल प्रतियां लौटाई जाय। कृपया नोट करें कि इस तारीख के बाद प्राप्त अनुरोधों पर कोई कार्यवाही नहीं की जायेगी।

Any discrepancies in the test report must be brought to our notice in writing within 45 days of the date of issue of this test report for effecting necessary corrections for which all the original copies of the test report must be returned.
Please note that request received beyond this date will not be entertained.

दस्तावेजो की प्राप्ति की पावती भेजे।
Please acknowledge receipt of the documents.
सधन्यवाद, Thanking you,

संलग्न : उपरोक्त
Encl I : As above

भवदीय (Yours sincerely)

ईकाई- प्रमुख
Unit-Head

CPRI

TEST REPORT

CENTRAL POWER RESEARCH INSTITUTE

(A Govt. of India Society)

Regional Testing Laboratory

3A, Institutional Area, Sector - 62

Noida - 201 309

CENTRAL POWER RESEARCH INSTITUTE

TEST REPORT

CPRI

Test Report Number	:	**CPRINOAHV24T0486** **Date: 22 August 2024**
Name and Address of the Customer	:	M/s. SK Engineers India Private Limited Plot No-C21 And 71/2, IID Centre Industrial Estate, Khordha, Odisha-752057
Name and Address of the Manufacturer	:	M/s. SK Engineers India Private Limited Plot No-C21 And 71/2, IID Centre Industrial Estate, Khordha, Odisha-752057
Particulars of Sample tested	:	400 A, 415 V, LT Panel
Type	:	Distribution Panel
Description of test sample	:	Refer Sheet 2 of 5
Serial Number	:	SKEIPL/17/07/24/2374
Number of Sample tested	:	One
Date(s) of Test(s)	:	14 & 16 August 2024
CPRI sample code number(s)	:	NOAHV24S0471
Particulars of test(s) conducted	:	Refer Sheet 3 of 5
Test in accordance with Standard/specification	:	IS/IEC 61439-1: 2020 & IS/IEC 61439-2: 2020
Sampling Plan	:	Nil
Customer's Requirement	:	Nil
Deviations, if any	:	Nil
Name of the witnessing persons		
Customer's Representatives	:	Mr. Tapas Das
Other than Customer's Representatives	:	Nil
Test subcontracted with address of the laboratory	:	Nil
Documents constituting this report (in words)		
Number of Sheet(s)	:	Five
Number of Oscillogram(s)	:	Nil
Number of Graph(s)	:	Nil
Number of Photograph(s)	:	One
Number of Test Circuit Diagram(s)	:	Nil
Number of Drawing(s)	:	One

(Gangeshwar Singh)
Test Engineer

(M.K. Jaiswal)
Head of Division
Reviewed and Authorized by

CENTRAL POWER RESEARCH INSTITUTE

TEST REPORT

CPRI

Test Report Number: CPRINOAHV24T0486 **Date: 22 August 2024**

DESCRIPTION OF THE SAMPLE TESTED
(As assigned by the manufacturer)

Sample	:	LT Panel
Rated voltage (Volts)	:	415
Rated current (Amps)	:	400
Frequency (Hz)	:	50
Insulation level	:	690 V
No. of Phases	:	3 PH+N
Dimension of Equipment (HxWxD)	:	975 mm x 600 mm x 360 mm

(Gangeshwar Singh)
Test Engineer

CENTRAL POWER RESEARCH INSTITUTE

TEST REPORT

CPRI

Test Report Number: CPRINOAHV24T0486 **Date: 22 August 2024**

SUMMARY OF TESTS CONDUCTED

1. Tests conducted : Degree of Protection: IP-65
2. Rating for which tested : 1) Protection against solid foreign body: IP-6X
   2) Protection against Ingress of water: IP-X5
3. Schedule of tests

Test Conducted	Clause Numbers	Sheet
Degree of Protection: IP-65	10.3 of IS/IEC 61439-1: 2020 & IS/IEC 61439-2: 2020	4 of 5

4. Oscillogram Numbers : Nil
5. Graph Numbers : Nil
6. Photograph Numbers : CPRINOAHV24T0486P01
7. Test Circuit Diagram Numbers : Nil
8. Drawing Numbers : As given below

Drawing Numbers

The manufacturer has guaranteed that the sample submitted for the test(s) has been manufactured in accordance with the following drawings

Sl. No.	Drawing Number	Sheet Number	Revision Number
1	SKEIPL/IP65/NOIDA/02	1 of 1	00

It is verified that these drawings adequately represent the sample tested. Verification of this drawing by CPRI is limited to dimensional check only wherever possible.

(Gangeshwar Singh)
Test Engineer

HIGH VOLTAGE LABORATORY
REGIONAL TESTING LABORATORY, PLOT NO. 3A,
INSTITUTIONAL AREA, SECTOR-62, NOIDA-201309, (UP), INDIA.
FAX 0120-2402824 AND PHONE NO. 0120-2402823

CENTRAL POWER RESEARCH INSTITUTE

TEST REPORT

CPRI

Test Report Number: CPRINOAHV24T0486 **Date: 22 August 2024**

TEST RESUTLS

Test conducted : **Degree of Protection- 65**

1) Protection against solid foreign body: IP – 6X

Date of test : 14 August 2024

Condition of the sample before test : New

Test Details

Test Description	Differential Pressure	Test Duration
The test object is placed inside a closed chamber in which talcum powder (unscented) is maintained in suspension by air current as per standard.	200 mm	8 Hours

Observations: No traces of talcum powder were observed inside the sample after IP-6X.

2) Protection against ingress of water: IP – X5

Date of test : 16 August 2024

Test details : The sample was watered from all the directions by means of hose nozzle with a diameter of 6.3 mm held at distance of 3 meters, delivery rate being maintained at 12.5 litres per minute as per standard. Test duration was 3.0 minutes.

Observations : No traces of water observed inside the sample after IPX5 test.

Conclusion : The sample tested comply with the requirements of clause no. 10.3 of IS/IEC 61439-1: 2020 & IS/IEC 61439-2: 2020 for the test conducted.

(Gangeshwar Singh)
Test Engineer

HIGH VOLTAGE LABORATORY
REGIONAL TESTING LABORATORY, PLOT NO. 3A,
INSTITUTIONAL AREA, SECTOR-62, NOIDA-201309, (UP), INDIA.
FAX 0120-2402824 AND PHONE NO. 0120-2402823

CENTRAL POWER RESEARCH INSTITUTE

TEST REPORT

CPRI

Test Report Number: CPRINOAHV24T0486 **Date: 22 August 2024**

NOTE

a) CPRI is responsible for the test results relate only to the sample(s) tested.

b) Publication or reproduction of this Test Report /Test Certificate in any form other than by complete set of the whole Test Report /Test Certificate and in the language written is not permitted without the written consent of CPRI.

c) Any Corrections/erasure invalidates the Test Report/Test Certificate

d) NABL has Accredited this laboratory as per ISO/IEC17025:2017, vide certificate no.TC-5223 for the tests carried out.

e) Any anomaly/discrepancy in the Test Report / Test Certificate should be brought to the notice of CPRI within 45 days from the date of issue.

TC-5223

(Gangeshwar Singh)
Test Engineer

----------**End of Test Report**----------

HIGH VOLTAGE LABORATORY
REGIONAL TESTING LABORATORY, PLOT NO. 3A,
INSTITUTIONAL AREA, SECTOR-62, NOIDA-201309, (UP), INDIA.
FAX 0120-2402824 AND PHONE NO. 0120-2402823

CENTRAL POWER RESEARCH INSTITUTE

TEST REPORT

CPRI

Test Report Number: CPRINOAHV24T0486 **Date: 22 August 2024**

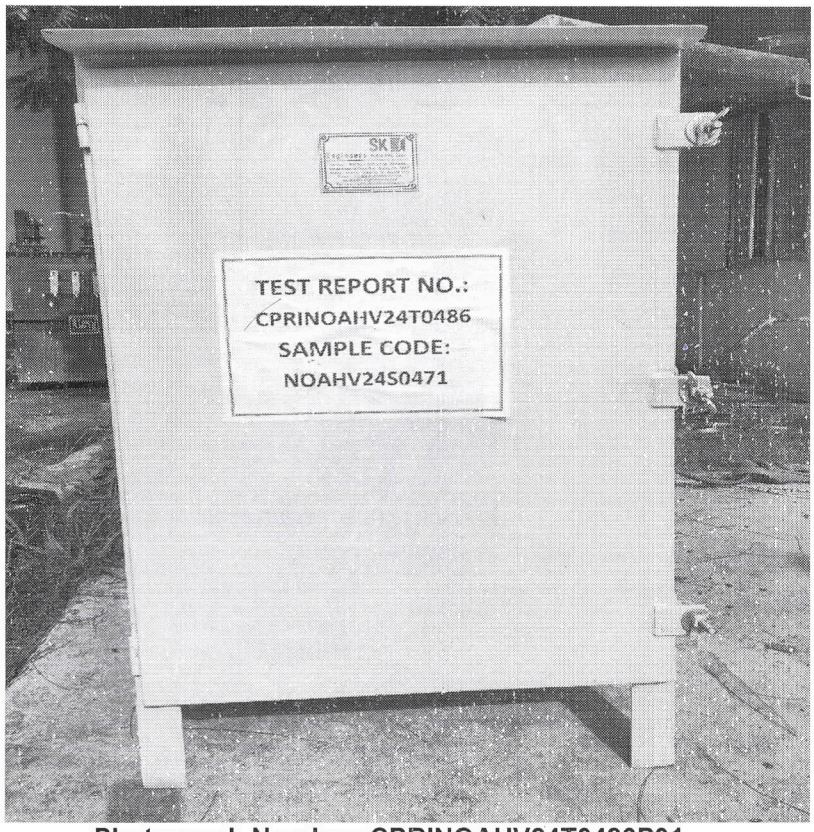

Photograph Number: CPRINOAHV24T0486P01

(Gangeshwar Singh)
Test Engineer

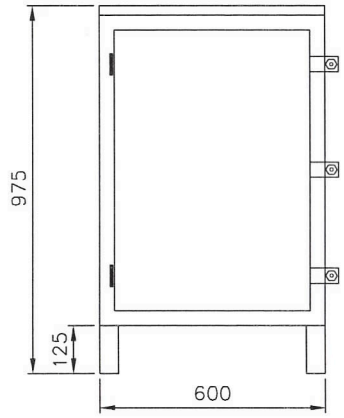

FRONT VIEW

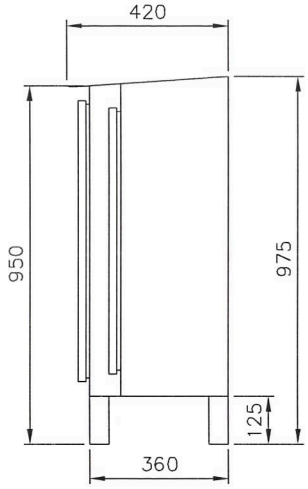

SIDE VIEW

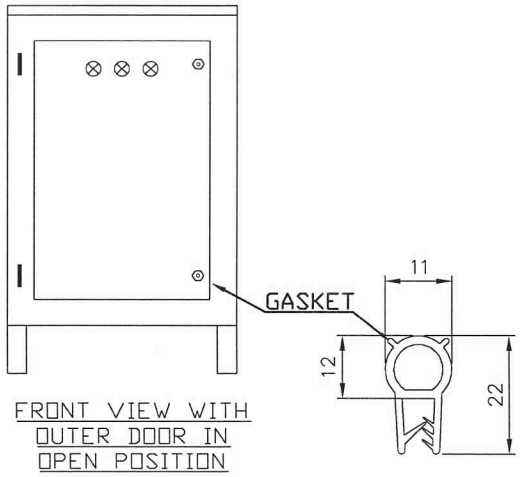

FRONT VIEW WITH OUTER DOOR IN OPEN POSITION

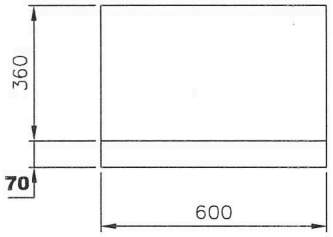

FOUNDATION PLAN

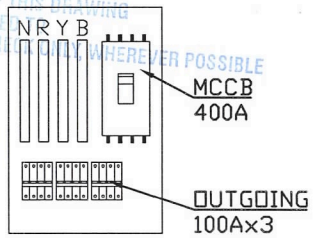

FRONT VIEW WITH INNER DOOR IN OPEN POSITION

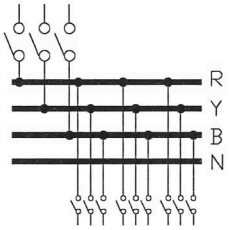

सीपीआरआई द्वारा इस चित्र का सत्यापन जहाँ भी संभव हो, यह केवल आयामी जाँच तक ही सीमित है।
VERIFICATION OF THIS DRAWING BY CPRI IS LIMITED TO DIMENSIONAL CHECK ONLY WHEREVER POSSIBLE

परीक्षण अभियंता
आरटीएल, सीपीआरआई नोएडा
TEST ENGINEER
RTL, CPRI, NOIDA

NOTES
1. PAINT SHADE ENCL.: SEIMENS GREY, RAL 7032
2. SHEET ENCL.: 2MM THICK CRCA SHEET
3. CABLE ENTRY: TOP AND BOTTOM

TOLERANCE: ±2%
RATING: 415 V AC, 400 A

BUS BAR SIZE

PHASE: 40x10 MM ALUMINIUM
NEUTRAL: 40x10 MM ALUMINIUM

यह चित्र सीपीआरआई से संबंधित है।
This drawing pertains to CPRI
परीक्षण रिपोर्ट सं./Test Report No. CPRINOAHV24TO486
दिनांक/Date 22 August 2024

MANUFACTURED BY:
SKEI
Engineers India Pvt Ltd
Plot no - C/21 and 71/2, IID Center,
Industrial Estate,Khorda, Odisha-752057.

TEST DETAILS	RATED VOLTAGE : 415 VAC.	SCALE	SHEET	DATE	DRAWN	Mr. Prakash
IP65 TESTING FOR LT CONTROL PANEL	CURRENT : 400 A	NTS	1 OF 1	12-08-2024	APPROVED	Mr.Tapas. Das
	TYPE : DISTRUBUTION PANEL			REV	SR. NO	SKEIPL/17/07/24/2374.
	DESIGNATION : CONTROL PANEL			00.	DRG.NO	SKEIPL/IP65/NOIDA/02.